EE 447/547 VLSI Design

Lecture 9:
Sequential Circuits

Outline

- Floorplanning
- Sequencing
- Sequencing Element Design
- Max and Min-Delay
- Clock Skew
- Time Borrowing
- Two-Phase Clocking

Project Strategy

- Proposal
  - Specifies inputs, outputs, relation between them
- Floorplan
  - Begins with block diagram
  - Annotate dimensions and location of each block
  - Requires detailed paper design
- Schematic
  - Make paper design simulate correctly
- Layout
  - Physical design, DRC, NCC, ERC

Floorplan

- How do you estimate block areas?
  - Begin with block diagram
  - Each block has
    - Inputs
    - Outputs
    - Function (draw schematic)
    - Type: array, datapath, random logic
- Estimation depends on type of logic

MIPS Floorplan

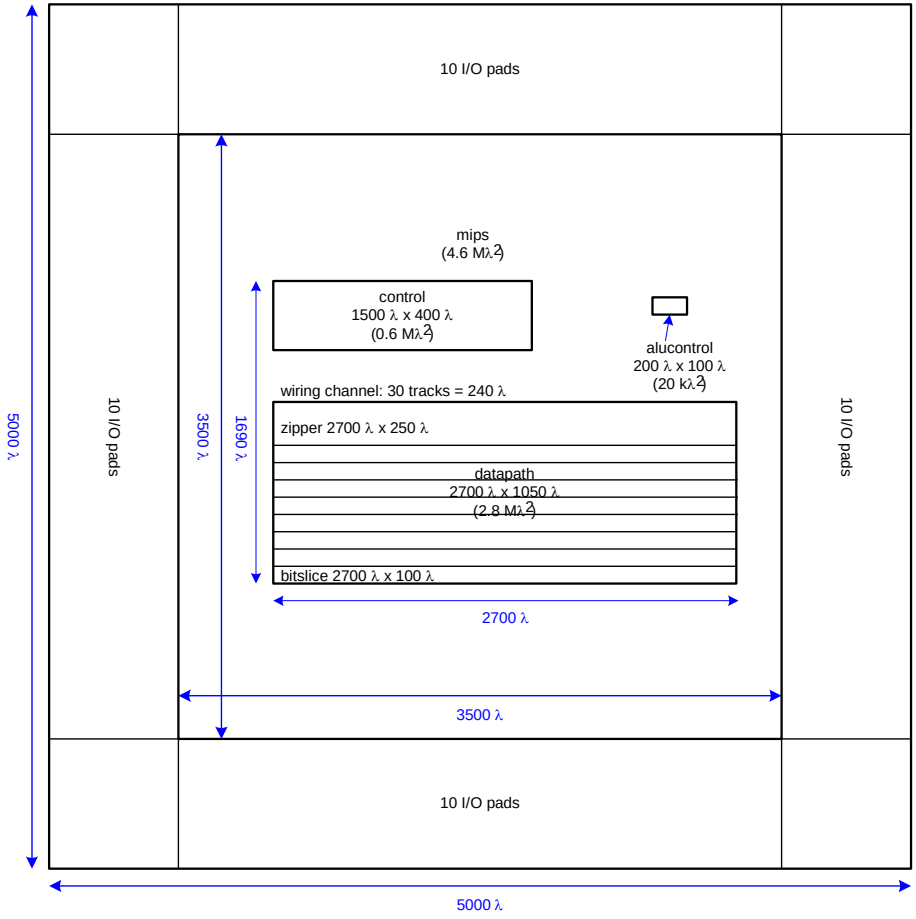

Area Estimation

- Arrays:
  - Layout basic cell
  - Calculate core area from # of cells
  - Allow area for decoders, column circuitry
- Datapaths
  - Sketch slice plan
  - Count area of cells from cell library
  - Ensure wiring is possible
- Random logic
  - Compare complexity do a design you have done

MIPS Slice Plan

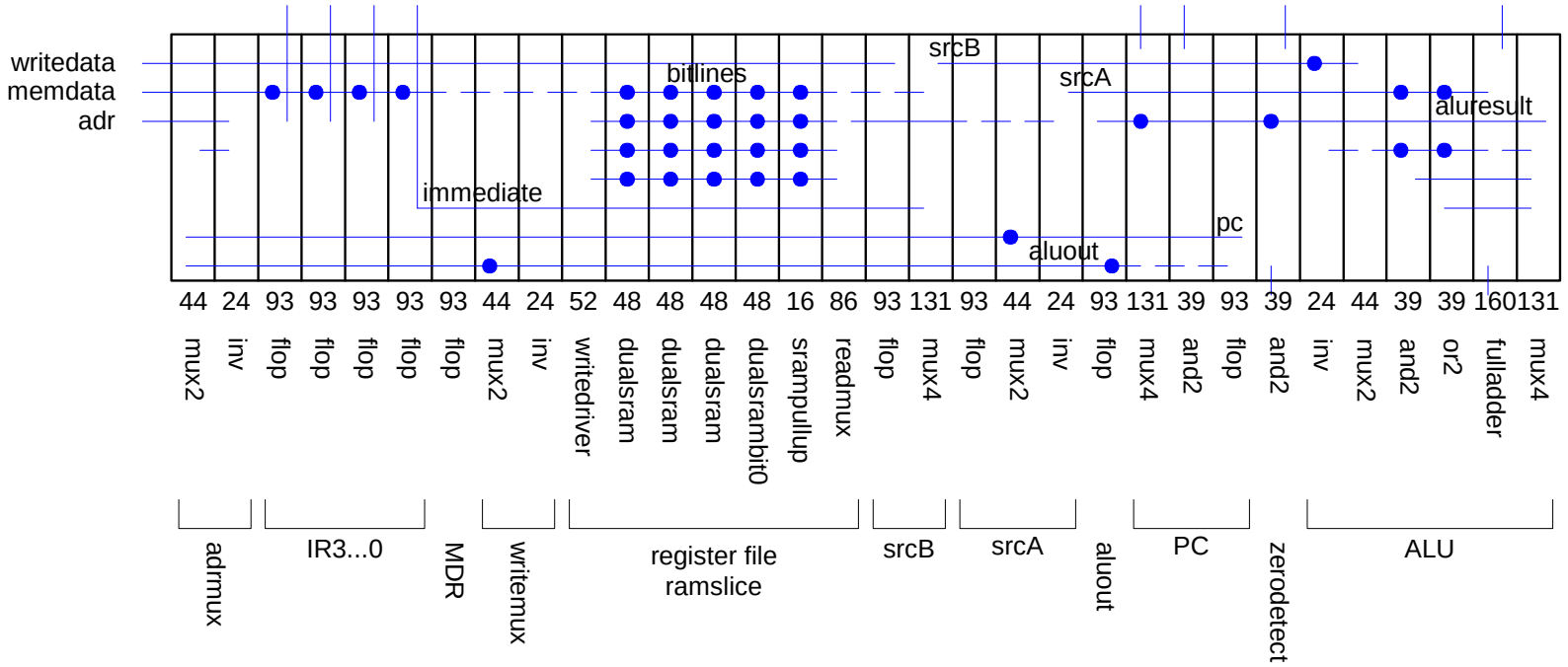

Typical Layout Densities

- Typical numbers of high-quality layout
- Derate by 2 for class projects to allow routing and some sloppy layout.
- Allocate space for big wiring channels

Element	**Area**
Random logic (2 metal layers)	1000-1500 λ^2 / transistor
Datapath	250 – 750 λ^2 / transistor Or 6 WL + 360 λ^2 / transistor
SRAM	1000 λ^2 / bit
DRAM	100 λ^2 / bit
ROM	100 λ^2 / bit

Sequencing

- *Combinational logic*
  - output depends on current inputs
- *Sequential logic*
  - output depends on current and previous inputs
  - Requires separating previous, current, future
  - Called *state* or *tokens*
  - Ex: FSM, pipeline

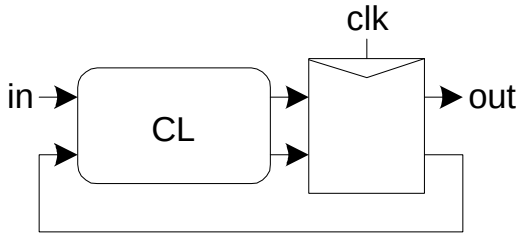

Finite State Machine

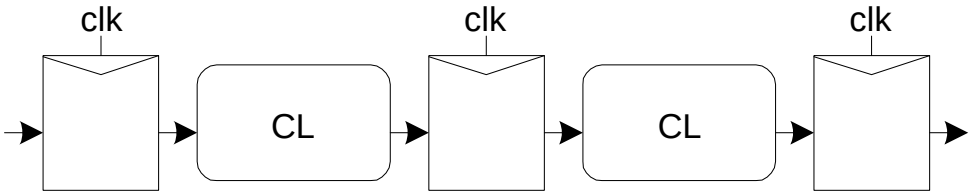

Pipeline

Sequencing Cont.

- If tokens moved through pipeline at constant speed, no sequencing elements would be necessary
- Ex: fiber-optic cable
  - Light pulses (tokens) are sent down cable
  - Next pulse sent before first reaches end of cable
  - No need for hardware to separate pulses
  - But *dispersion* sets min time between pulses
- This is called *wave pipelining* in circuits
- In most circuits, dispersion is high
  - Delay fast tokens so they don't catch slow ones.

Sequencing Overhead

- Use flip-flops to delay fast tokens so they move through exactly one stage each cycle.
- Inevitably adds some delay to the slow tokens
- Makes circuit slower than just the logic delay
  - Called sequencing overhead
- Some people call this clocking overhead
  - But it applies to asynchronous circuits too
  - Inevitable side effect of maintaining sequence

Sequencing Elements

- **Latch**: Level sensitive
  - a.k.a. transparent latch, D latch
- **Flip-flop**: edge triggered
  - A.k.a. master-slave flip-flop, D flip-flop, D register
- Timing Diagrams
  - Transparent
  - Opaque
  - Edge-trigger

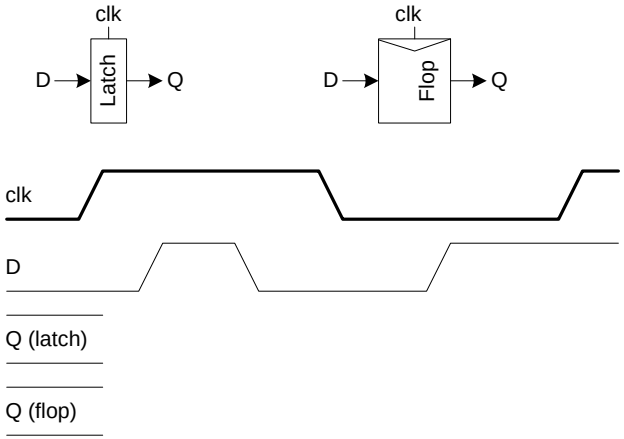

Sequencing Elements

- **Latch**: Level sensitive
  - a.k.a. transparent latch, D latch
- **Flip-flop**: edge triggered
  - A.k.a. master-slave flip-flop, D flip-flop, D register
- Timing Diagrams
  - Transparent
  - Opaque
  - Edge-trigger

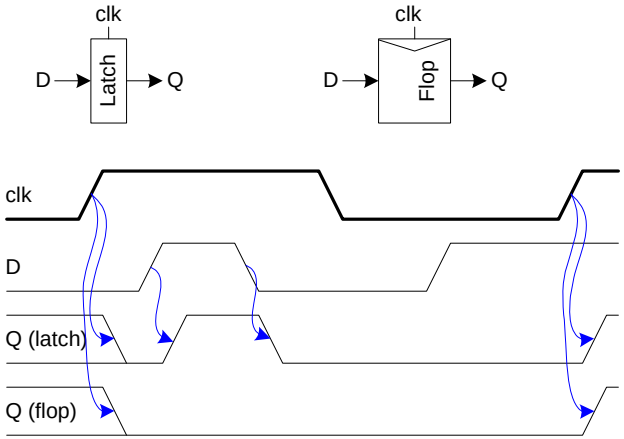

Latch Design

- Pass Transistor Latch
- Pros

  +

  +
- Cons
  -
  -
  -
  -
  -
  -

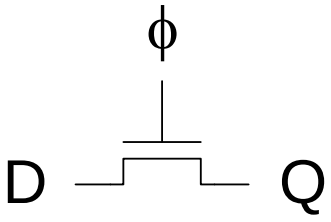

Latch Design

- Pass Transistor Latch
- Pros
  - + Tiny
  - + Low clock load
- Cons
  - V_t drop
  - nonrestoring
  - backdriving
  - output noise sensitivity
  - dynamic
  - diffusion input

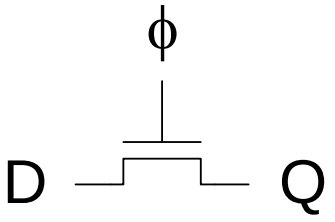

Used in 1970's

Latch Design

- Transmission gate

  +

  -

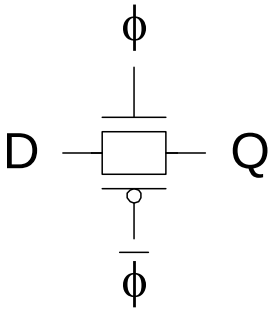

Latch Design

- Transmission gate
  - \+ No V_t drop
  - \- Requires inverted clock

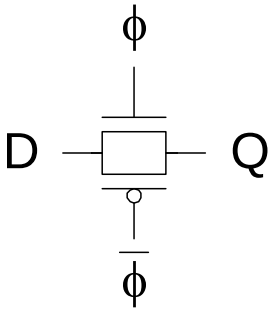

Latch Design

- Inverting buffer

  +

  +

  + Fixes either

    -

    -

  -

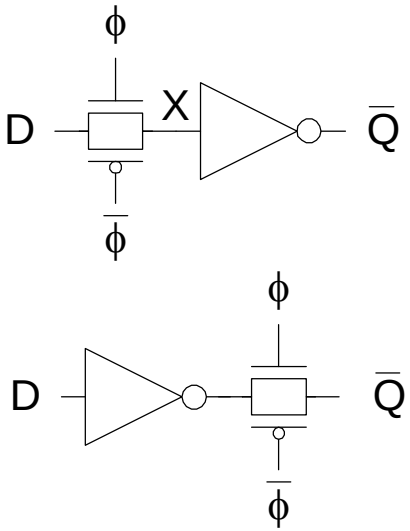

Latch Design

- Inverting buffer
  - + Restoring
  - + No backdriving
  - + Fixes either
    - Output noise sensitivity
    - Or diffusion input
  - Inverted output

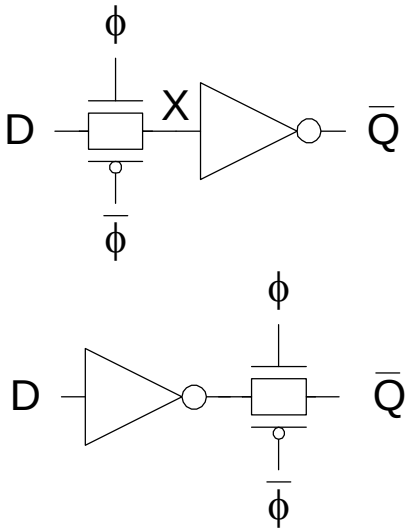

Latch Design

- Tristate feedback
  - +
  - ❑

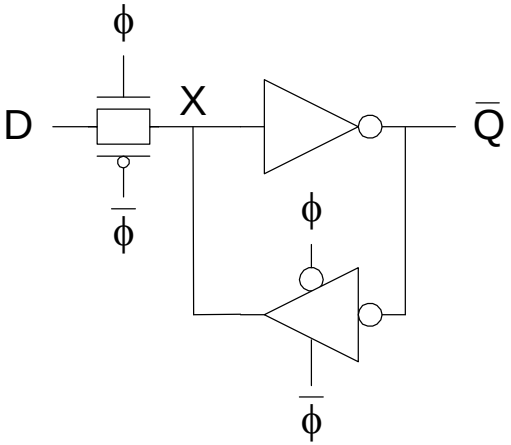

Latch Design

- Tristate feedback
  - + Static
  - Backdriving risk

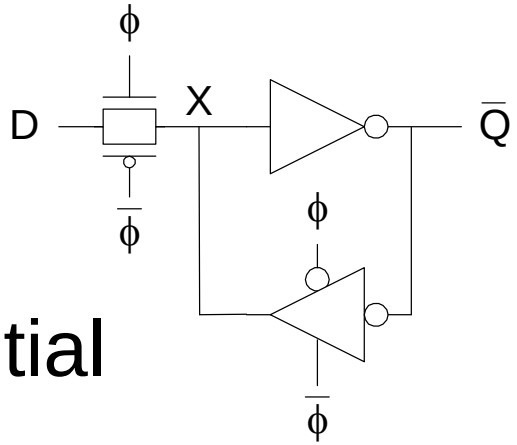

- Static latches are now essential

Latch Design

- Buffered input

  +

  +

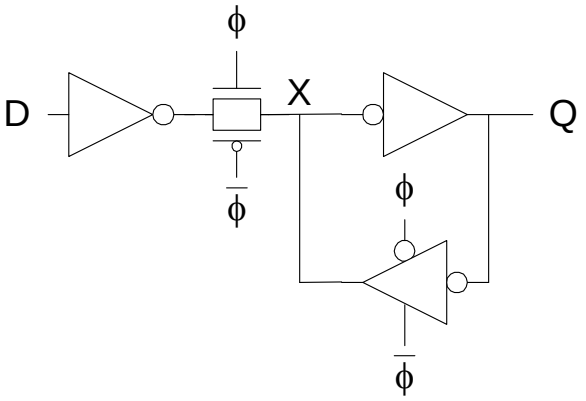

Latch Design

- Buffered input
  - + Fixes diffusion input
  - + Noninverting

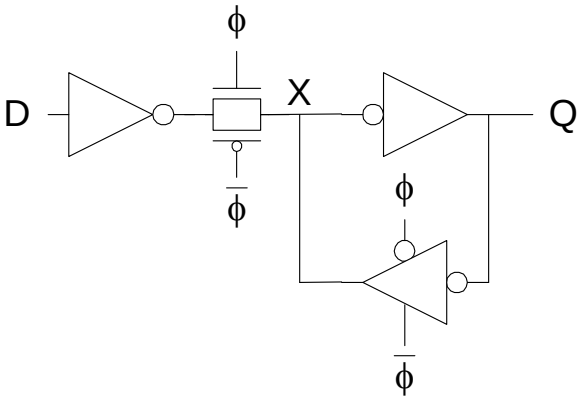

Latch Design

- Buffered output

  +

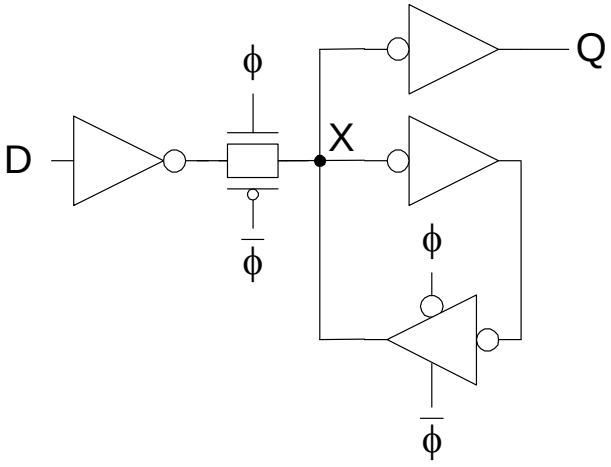

Latch Design

- Buffered output
  + No backdriving

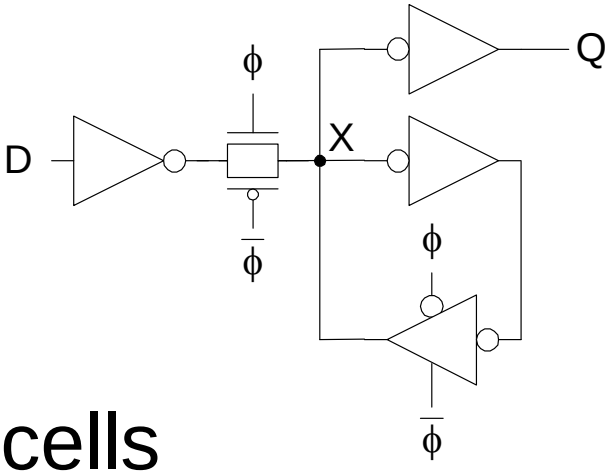

- Widely used in standard cells
  + Very robust (most important)
  - Rather large
  - Rather slow (1.5 – 2 FO4 delays)
  - High clock loading

Latch Design

- Datapath latch

  +

  -

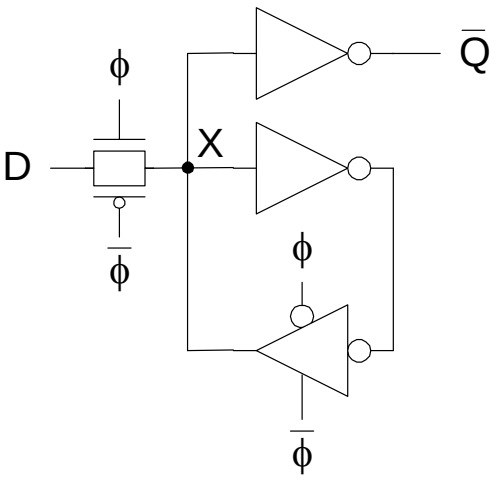

Latch Design

- Datapath latch
  - \+ Smaller, faster
  - \- unbuffered input

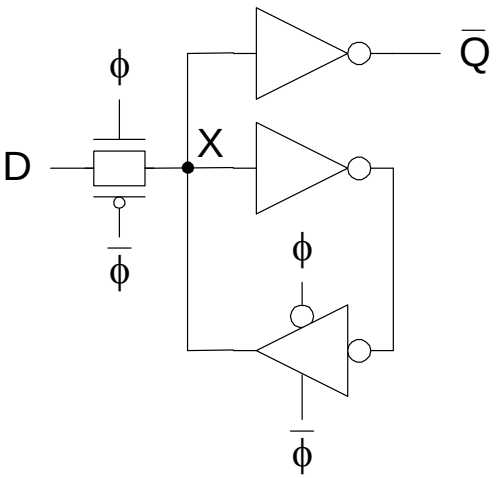

Flip-Flop Design

- Flip-flop is built as pair of back-to-back latches

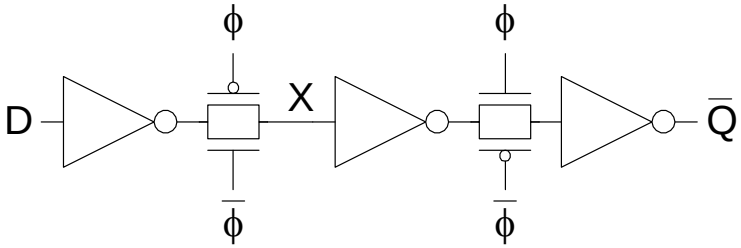

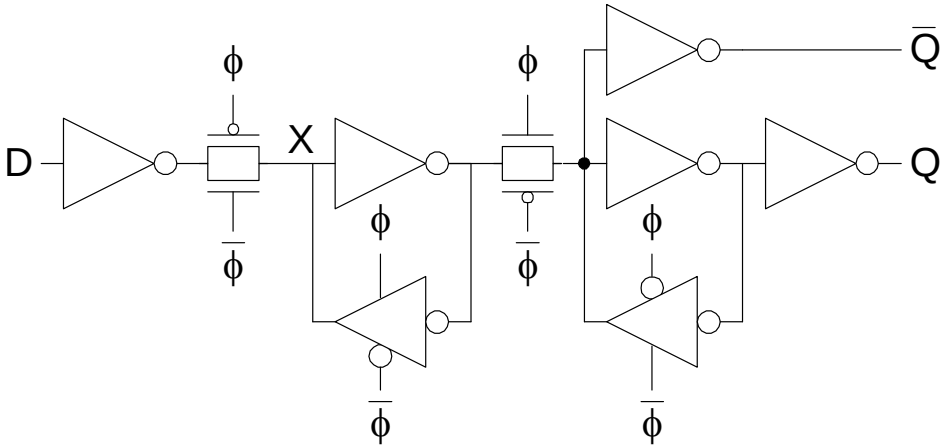

Enable

- Enable: ignore clock when en = 0
  - Mux: increase latch D-Q delay
  - Clock Gating: increase en setup time, skew

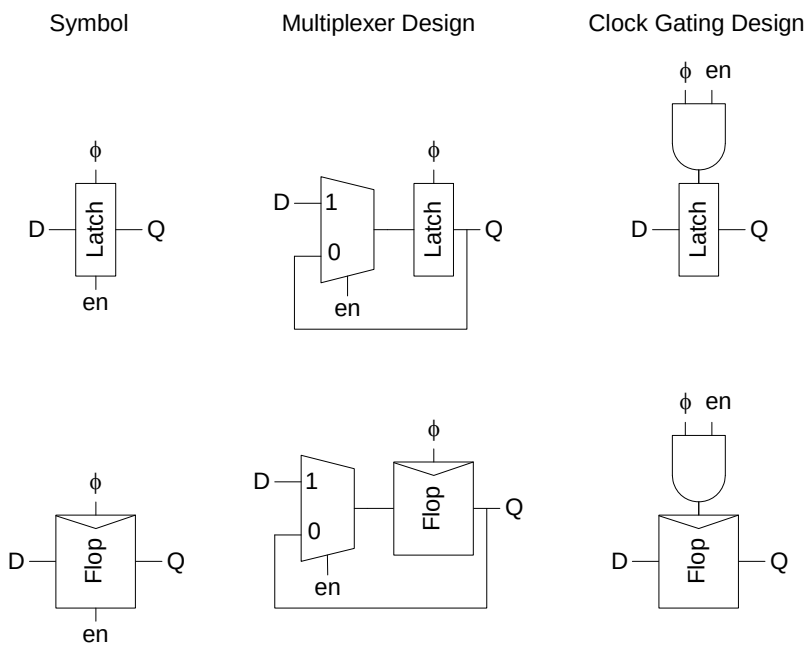

Reset

- Force output low when reset asserted
- Synchronous vs. asynchronous

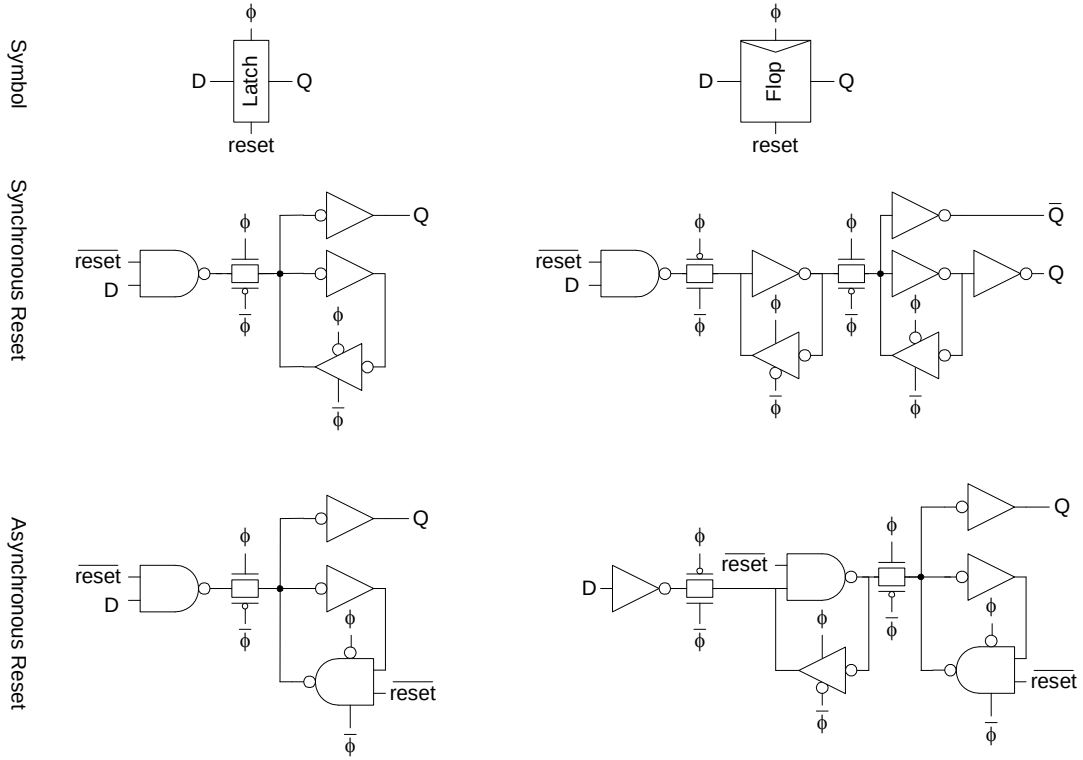

Set / Reset

- Set forces output high when enabled
- Flip-flop with asynchronous set and reset

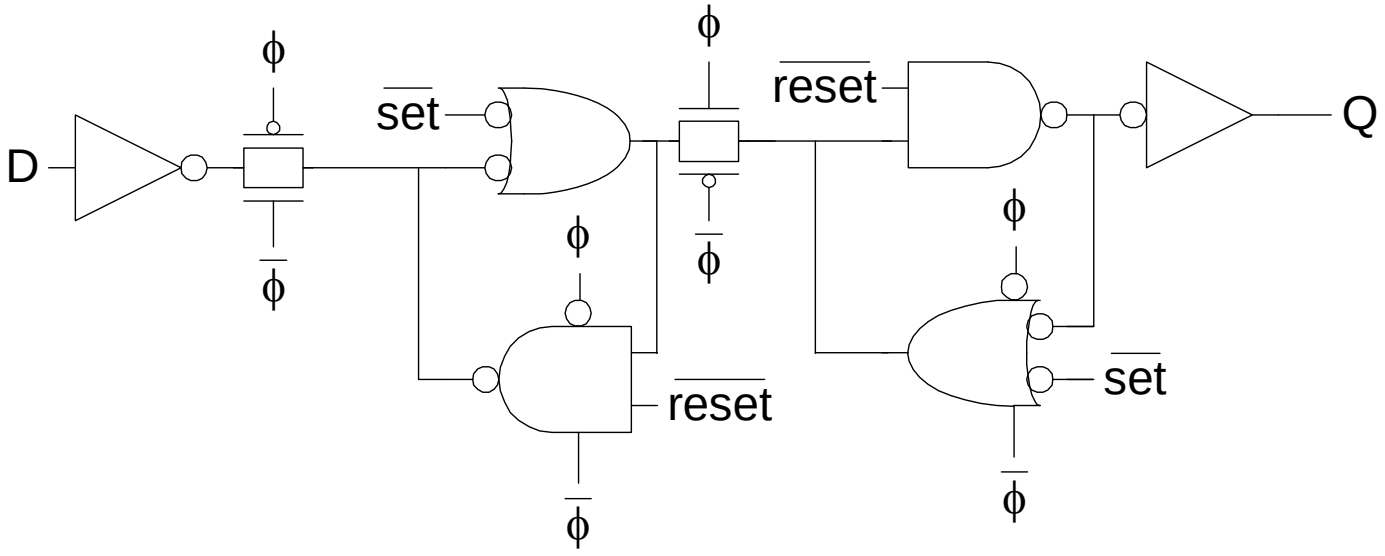

Sequencing Methods

- Flip-flops
- 2-Phase Latches
- Pulsed Latches

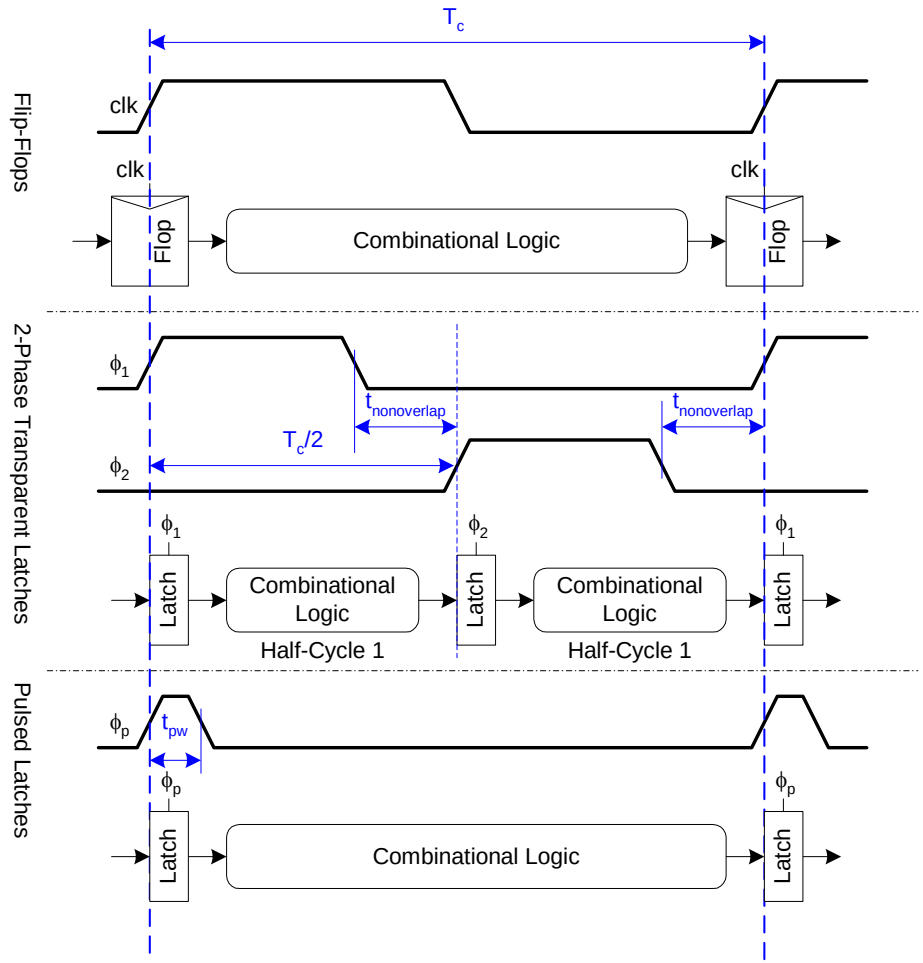

Timing Diagrams

Contamination and Propagation Delays

t_{pd}	Logic Prop. Delay
t_{cd}	Logic Cont. Delay
t_{pcq}	Latch/Flop Clk-Q Prop Delay
t_{ccq}	Latch/Flop Clk-Q Cont. Delay
t_{pdq}	Latch D-Q Prop Delay
t_{pcq}	Latch D-Q Cont. Delay
t_{setup}	Latch/Flop Setup Time
t_{hold}	Latch/Flop Hold Time

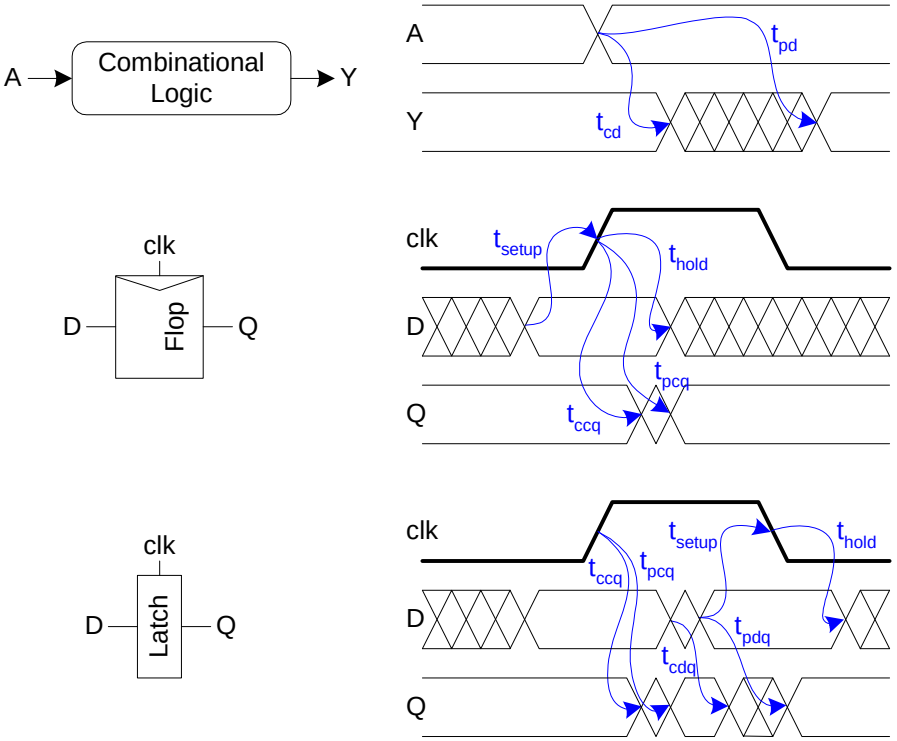

Max-Delay: Flip-Flops

$$t_{pd} \le T_c - \underbrace{(\qquad\qquad)}_{\text{sequencing overhead}}$$

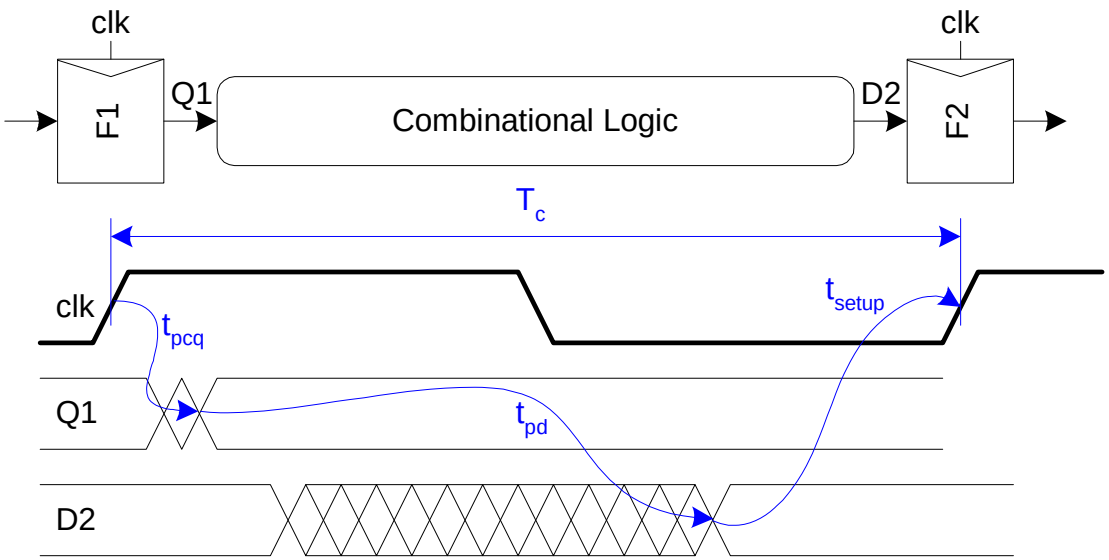

Max-Delay: Flip-Flops

$$t_{pd} \le T_c - \underbrace{\left(t_{\text{setup}} + t_{pcq}\right)}_{\text{sequencing overhead}}$$

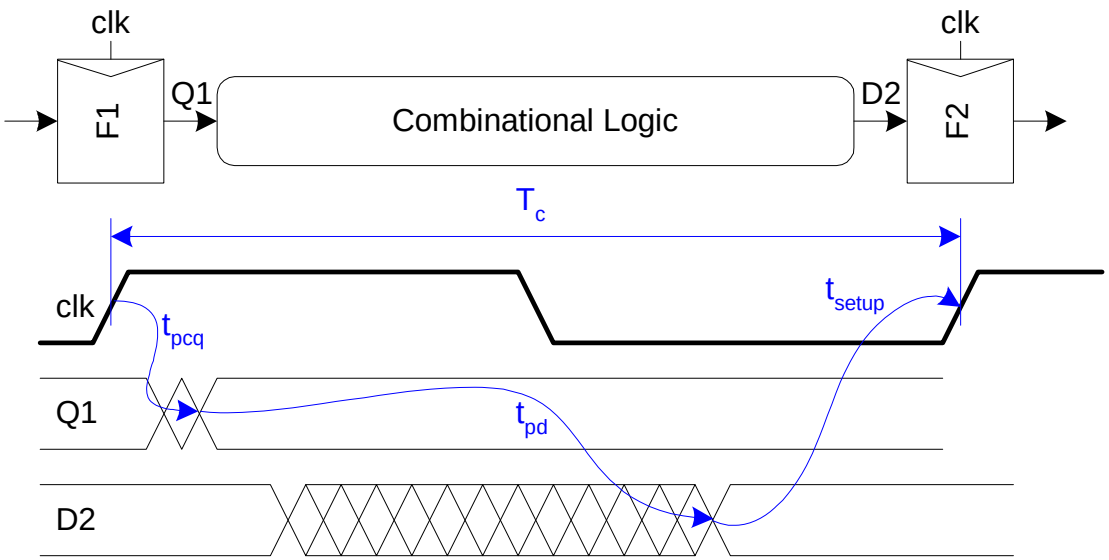

Max Delay: 2-Phase Latches

$$t_{pd} = t_{pd1} + t_{pd2} \le T_c - \underbrace{(\qquad\qquad)}_{\text{sequencing overhead}}$$

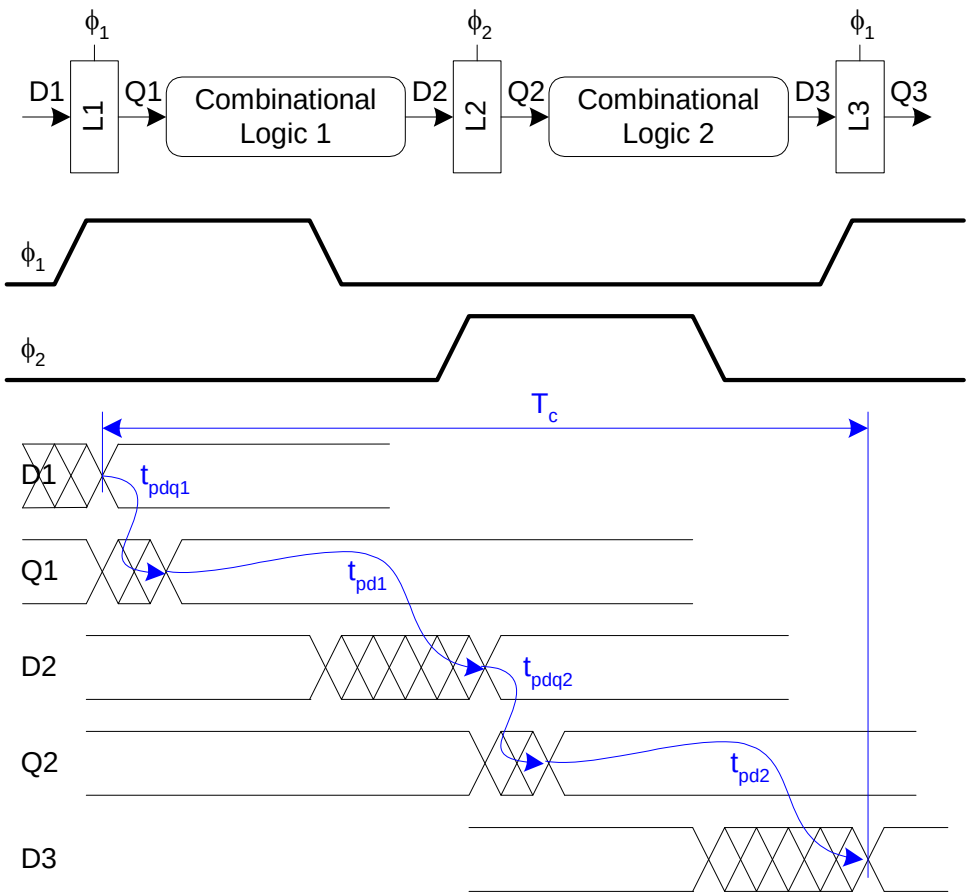

Max Delay: 2-Phase Latches

$$t_{pd} = t_{pd1} + t_{pd2} \le T_c - \underbrace{\left(2t_{pdq}\right)}_{\text{sequencing overhead}}$$

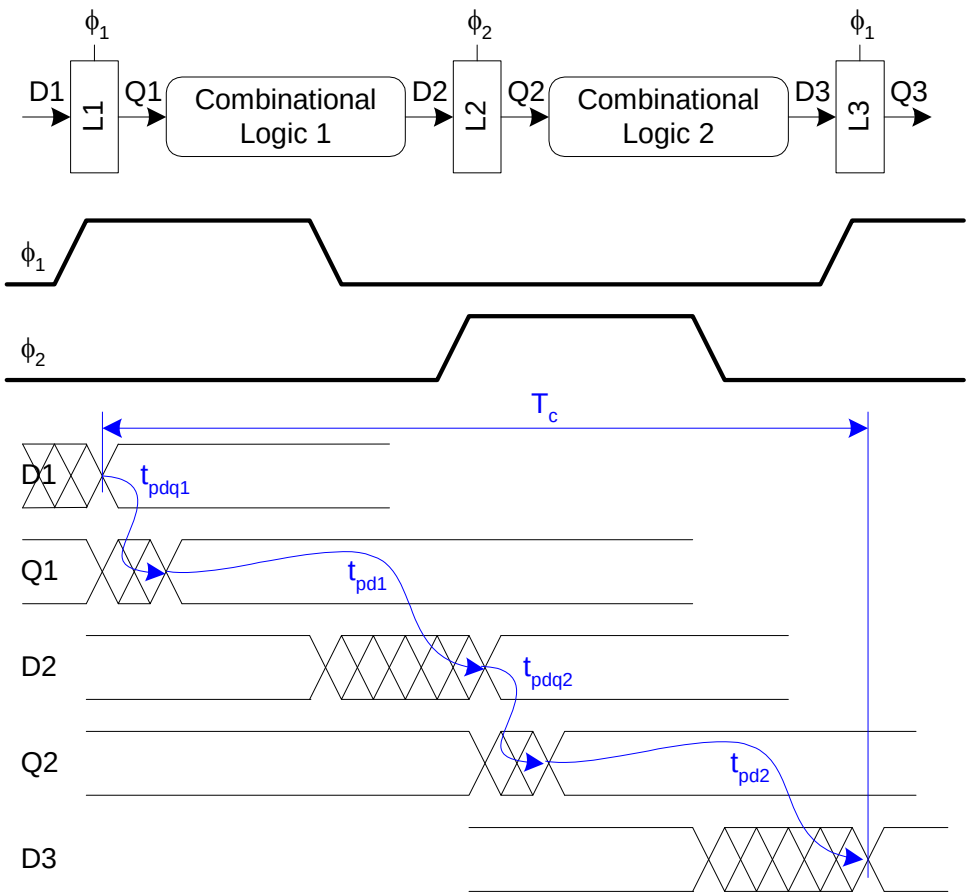

Max Delay: Pulsed Latches

$$t_{pd} \le T_c - \underbrace{\max\left(\qquad\qquad \right)}_{\text{sequencing overhead}}$$

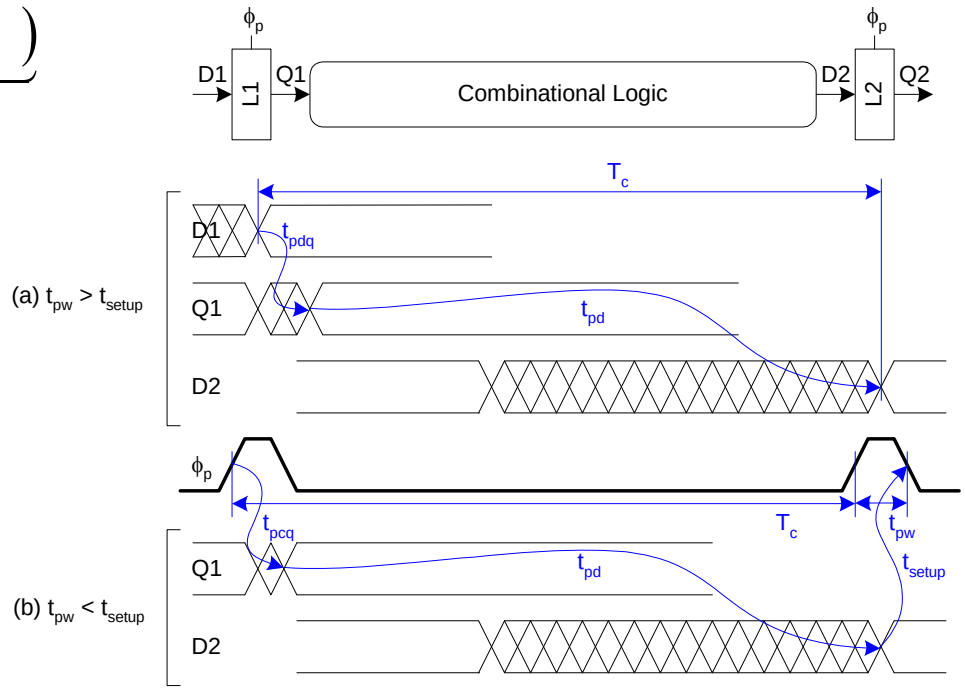

Max Delay: Pulsed Latches

$$t_{pd} \le T_c - \underbrace{\max\left(t_{pdq}, t_{pcq} + t_{\text{setup}} - t_{pw}\right)}_{\text{sequencing overhead}}$$

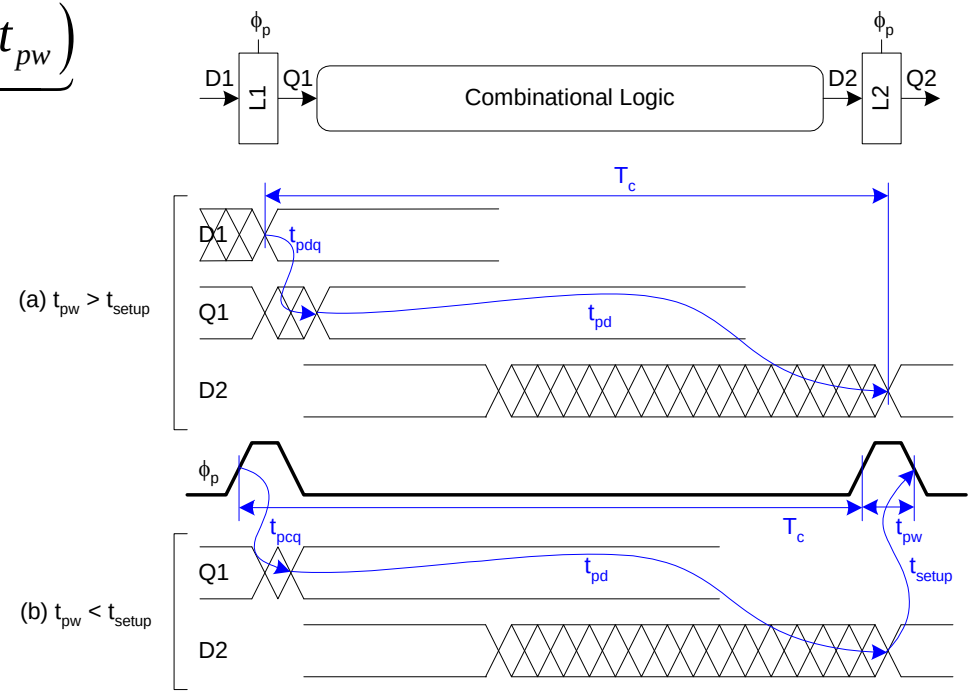

Min-Delay: Flip-Flops

$t_{cd} \geq$

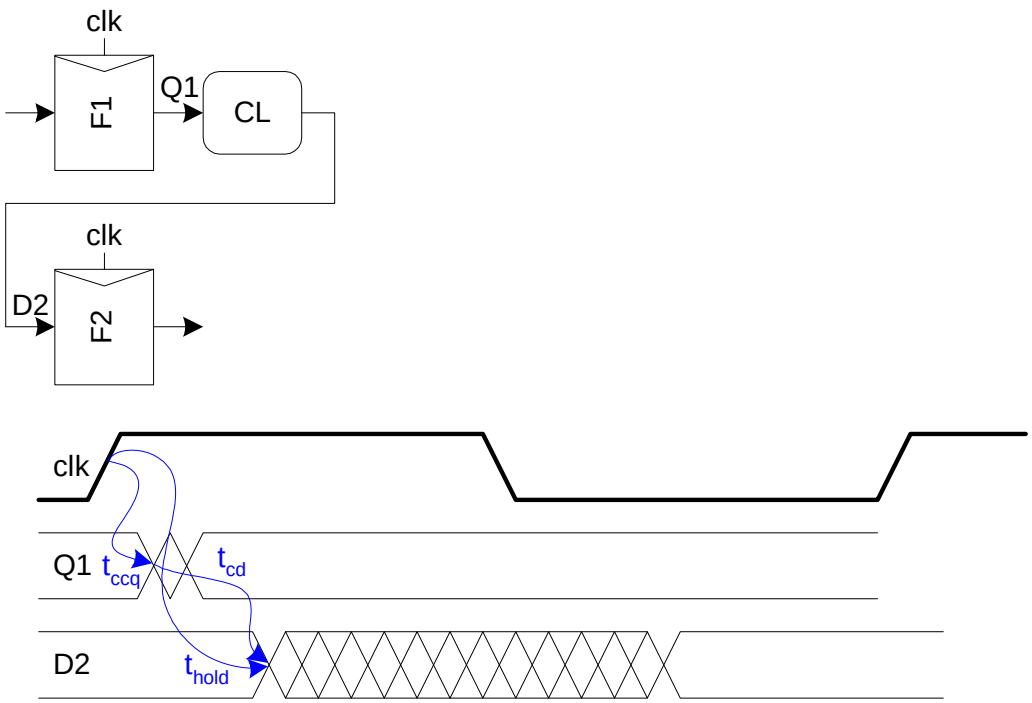

Min-Delay: Flip-Flops

$$t_{cd} \geq t_{\text{hold}} - t_{ccq}$$

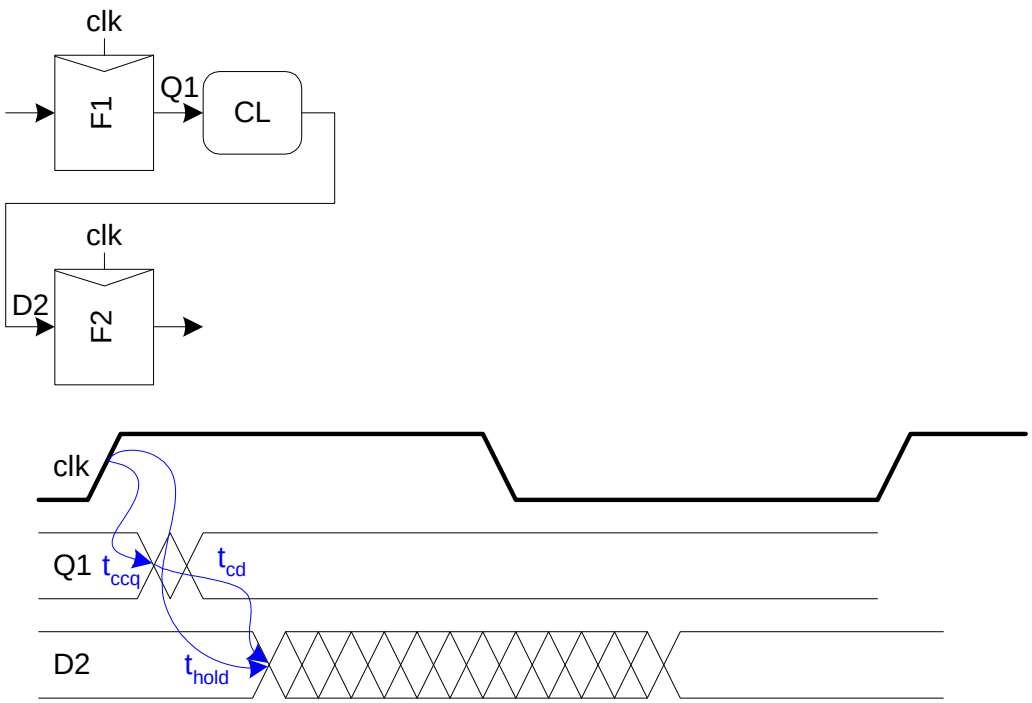

Min-Delay: 2-Phase Latches

$t_{cd1}, t_{cd2} \geq$

Hold time reduced by nonoverlap

Paradox: hold applies twice each cycle, vs. only once for flops.

But a flop is made of two latches!

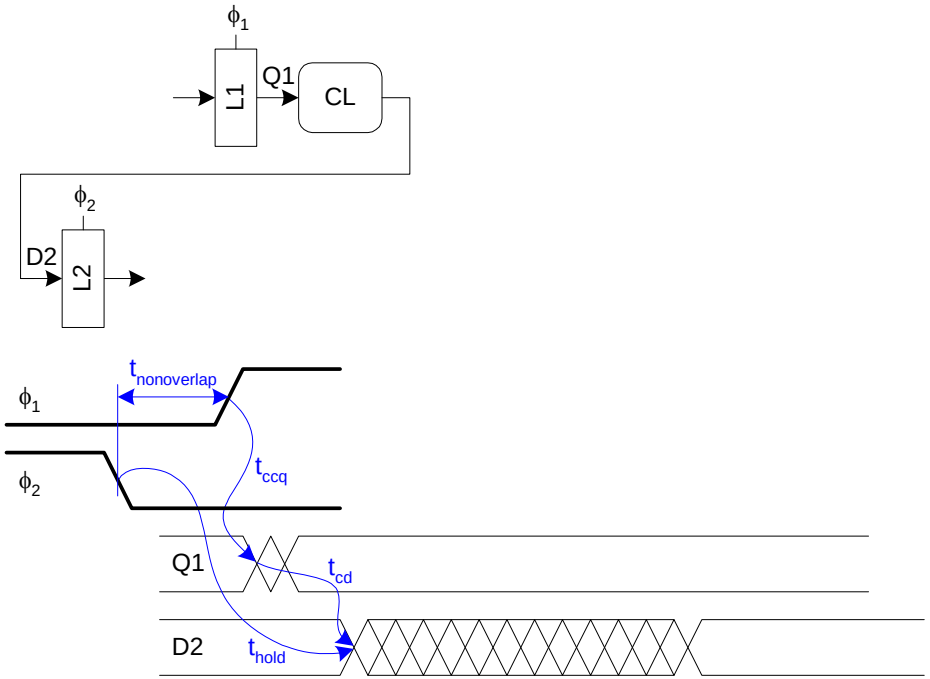

Min-Delay: 2-Phase Latches

$$t_{cd1,}t_{cd2} \geq t_{\text{hold}} - t_{ccq} - t_{\text{nonoverlap}}$$

Hold time reduced by nonoverlap

Paradox: hold applies twice each cycle, vs. only once for flops.

But a flop is made of two latches!

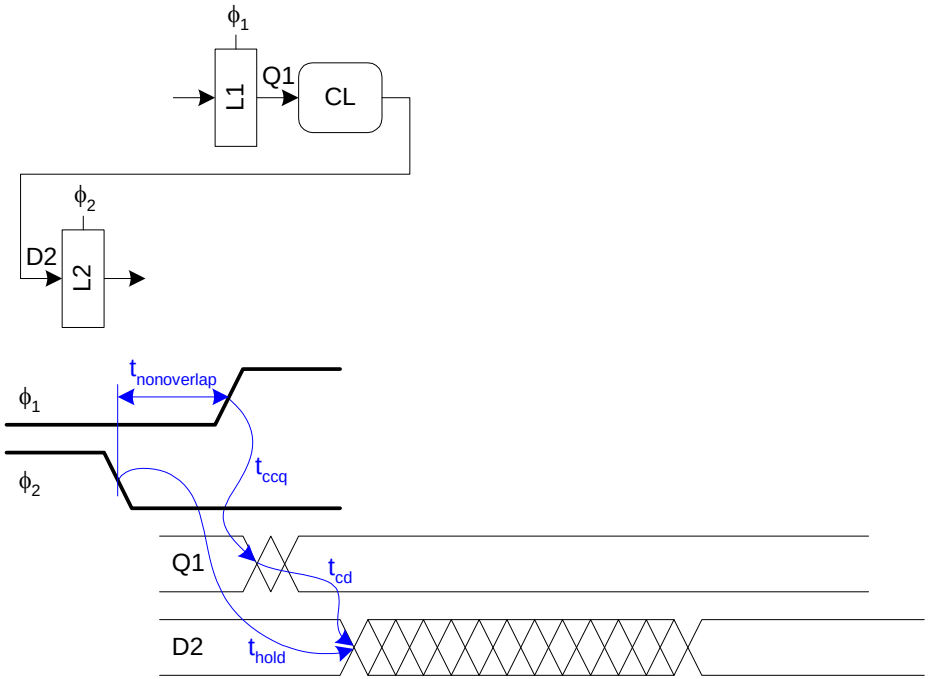

Min-Delay: Pulsed Latches

$t_{cd} \geq$

Hold time increased by pulse width

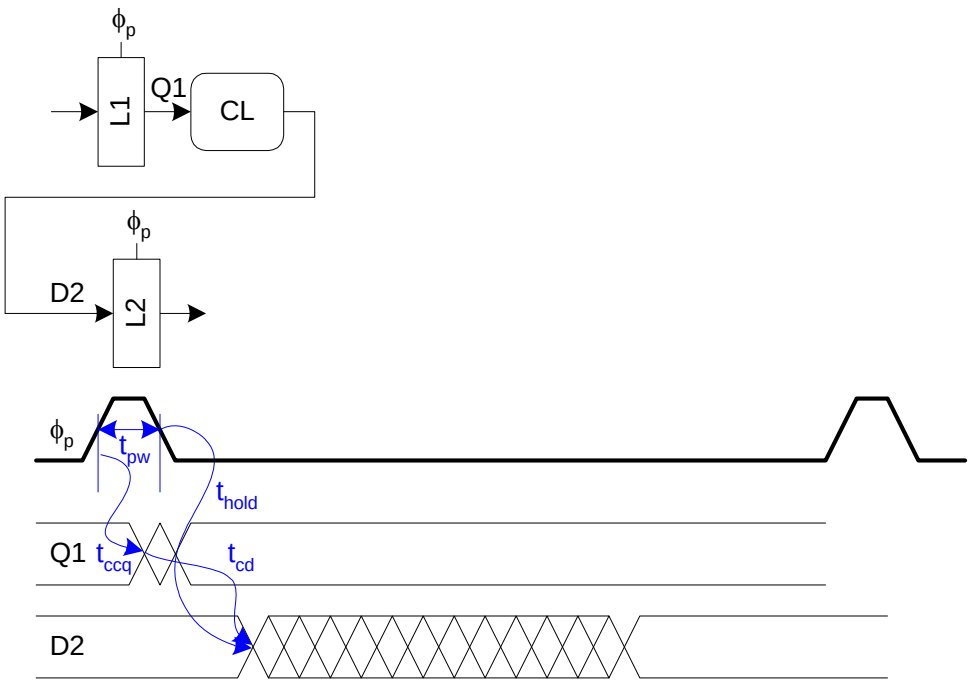

Min-Delay: Pulsed Latches

$$t_{cd} \geq t_{\text{hold}} - t_{ccq} + t_{pw}$$

Hold time increased by pulse width

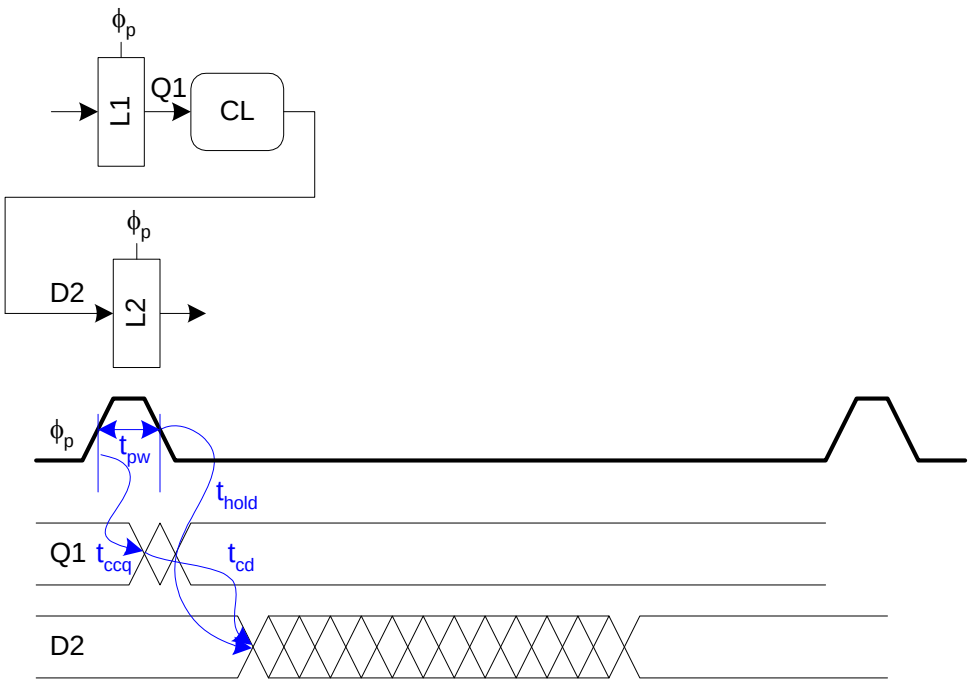

Time Borrowing

- In a flop-based system:
  - Data launches on one rising edge
  - Must setup before next rising edge
  - If it arrives late, system fails
  - If it arrives early, time is wasted
  - Flops have hard edges
- In a latch-based system
  - Data can pass through latch while transparent
  - Long cycle of logic can borrow time into next
  - As long as each loop completes in one cycle

Time Borrowing Example

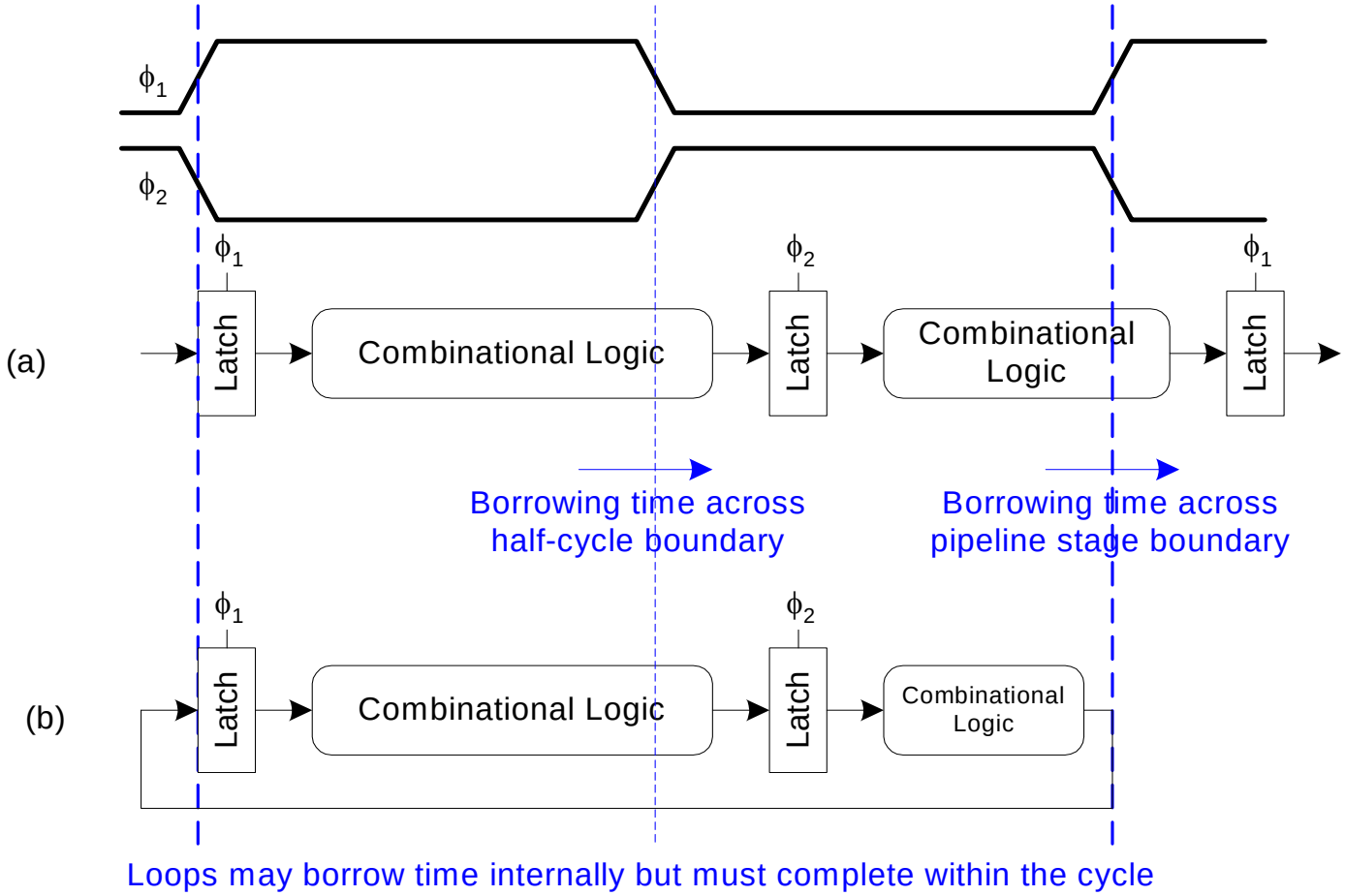

How Much Borrowing?

2-Phase Latches

$$t_{\text{borrow}} \le \frac{T_c}{2} - \left(t_{\text{setup}} + t_{\text{nonoverlap}}\right)$$

Pulsed Latches

$$t_{\text{borrow}} \le t_{pw} - t_{\text{setup}}$$

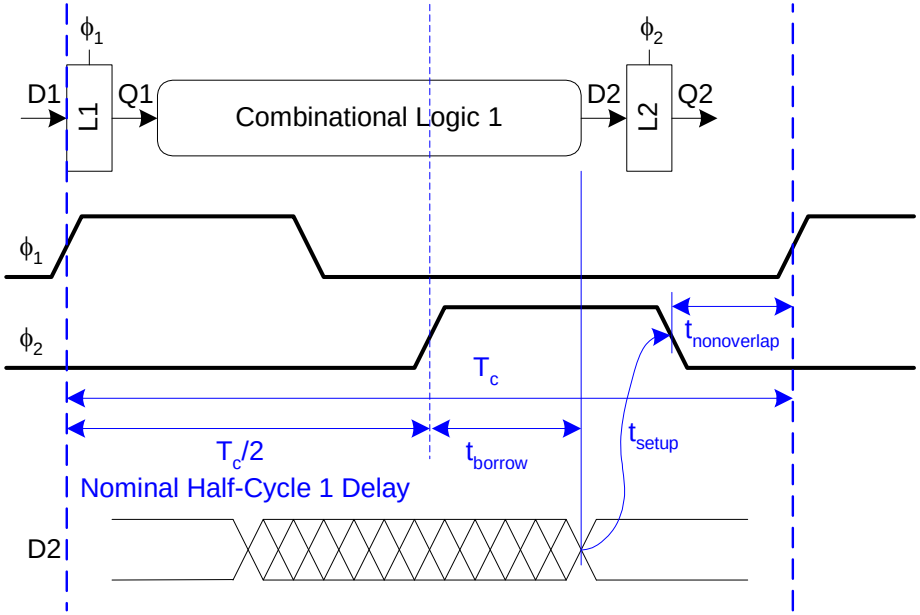

Clock Skew

- We have assumed zero clock skew
- Clocks really have uncertainty in arrival time
  - Decreases maximum propagation delay
  - Increases minimum contamination delay
  - Decreases time borrowing

Skew: Flip-Flops

$$t_{pd} \le T_c - \underbrace{\left(t_{pcq} + t_{\text{setup}} + t_{\text{skew}}\right)}_{\text{sequencing overhead}}$$

$$t_{cd} \ge t_{\text{hold}} - t_{ccq} + t_{\text{skew}}$$

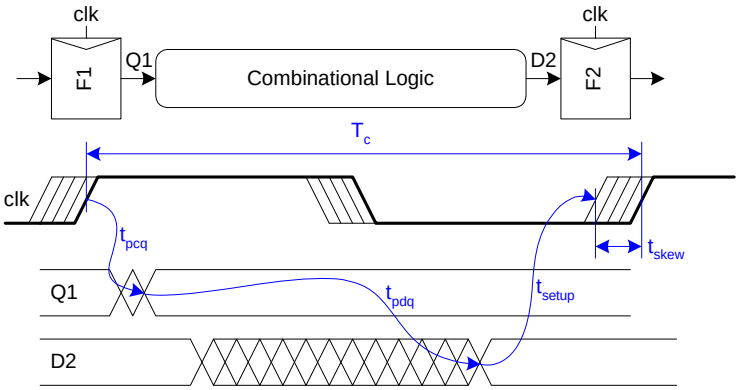

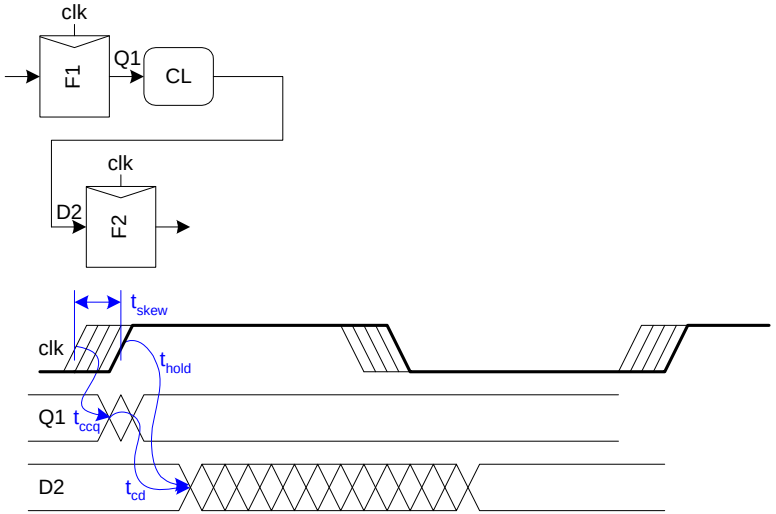

Skew: Latches

2-Phase Latches

$$t_{pd} \le T_c - \underbrace{\left(2t_{pdq}\right)}_{\text{sequencing overhead}}$$

$$t_{cd1}, t_{cd2} \ge t_{\text{hold}} - t_{ccq} - t_{\text{nonoverlap}} + t_{\text{skew}}$$

$$t_{\text{borrow}} \le \frac{T_c}{2} - \left(t_{\text{setup}} + t_{\text{nonoverlap}} + t_{\text{skew}}\right)$$

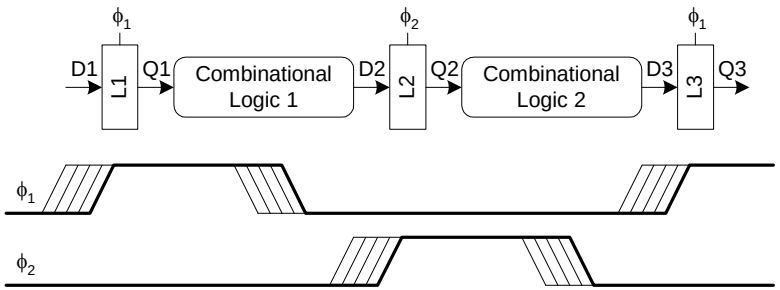

Pulsed Latches

$$t_{pd} \le T_c - \underbrace{\max\left(t_{pdq}, t_{pcq} + t_{\text{setup}} - t_{pw} + t_{\text{skew}}\right)}_{\text{sequencing overhead}}$$

$$t_{cd} \ge t_{\text{hold}} + t_{pw} - t_{ccq} + t_{\text{skew}}$$

$$t_{\text{borrow}} \le t_{pw} - \left(t_{\text{setup}} + t_{\text{skew}}\right)$$

Two-Phase Clocking

- If setup times are violated, reduce clock speed
- If hold times are violated, chip fails at any speed
- In this class, working chips are most important
  - No tools to analyze clock skew
- An easy way to guarantee hold times is to use 2-phase latches with big nonoverlap times
- Call these clocks ϕ_1, ϕ_2 (ph1, ph2)

Safe Flip-Flop

- In class, use flip-flop with nonoverlapping clocks
  - Very slow – nonoverlap adds to setup time
  - But no hold times
- In industry, use a better timing analyzer
  - Add buffers to slow signals if hold time is at risk

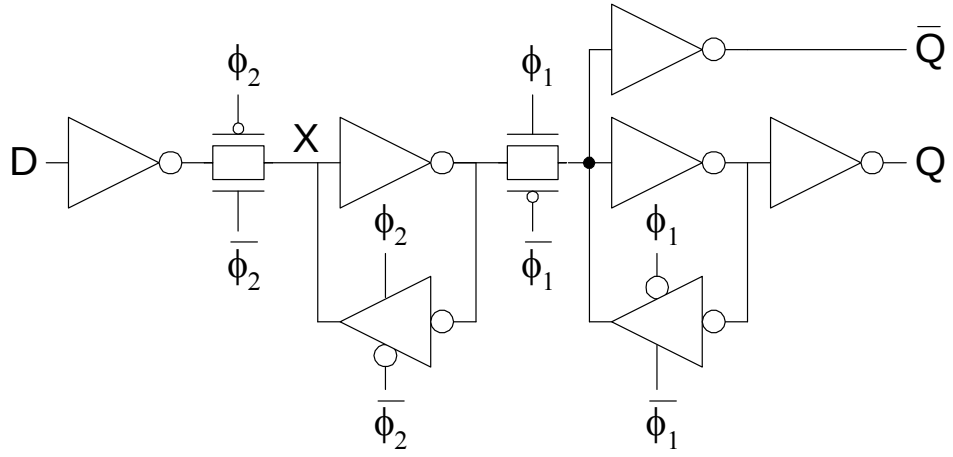

Summary

- Flip-Flops:
  - Very easy to use, supported by all tools
- 2-Phase Transparent Latches:
  - Lots of skew tolerance and time borrowing
- Pulsed Latches:
  - Fast, some skew tol & borrow, hold time risk

	Sequencing overhead ($T_c - t_{pd}$)	Minimum logic delay t_{cd}	Time borrowing t_{borrow}
Flip-Flops	$t_{pcq} + t_{setup} + t_{skew}$	$t_{hold} - t_{ccq} + t_{skew}$	0
Two-Phase Transparent Latches	$2t_{pdq}$	$t_{hold} - t_{ccq} - t_{nonoverlap} + t_{skew}$ in each half-cycle	$\frac{T_c}{2} - \left(t_{setup} + t_{nonoverlap} + t_{skew}\right)$
Pulsed Latches	$\max\left(t_{pdq}, t_{pcq} + t_{setup} - t_{pw} + t_{skew}\right)$	$t_{hold} - t_{ccq} + t_{pw} + t_{skew}$	$t_{pw} - \left(t_{setup} + t_{skew}\right)$